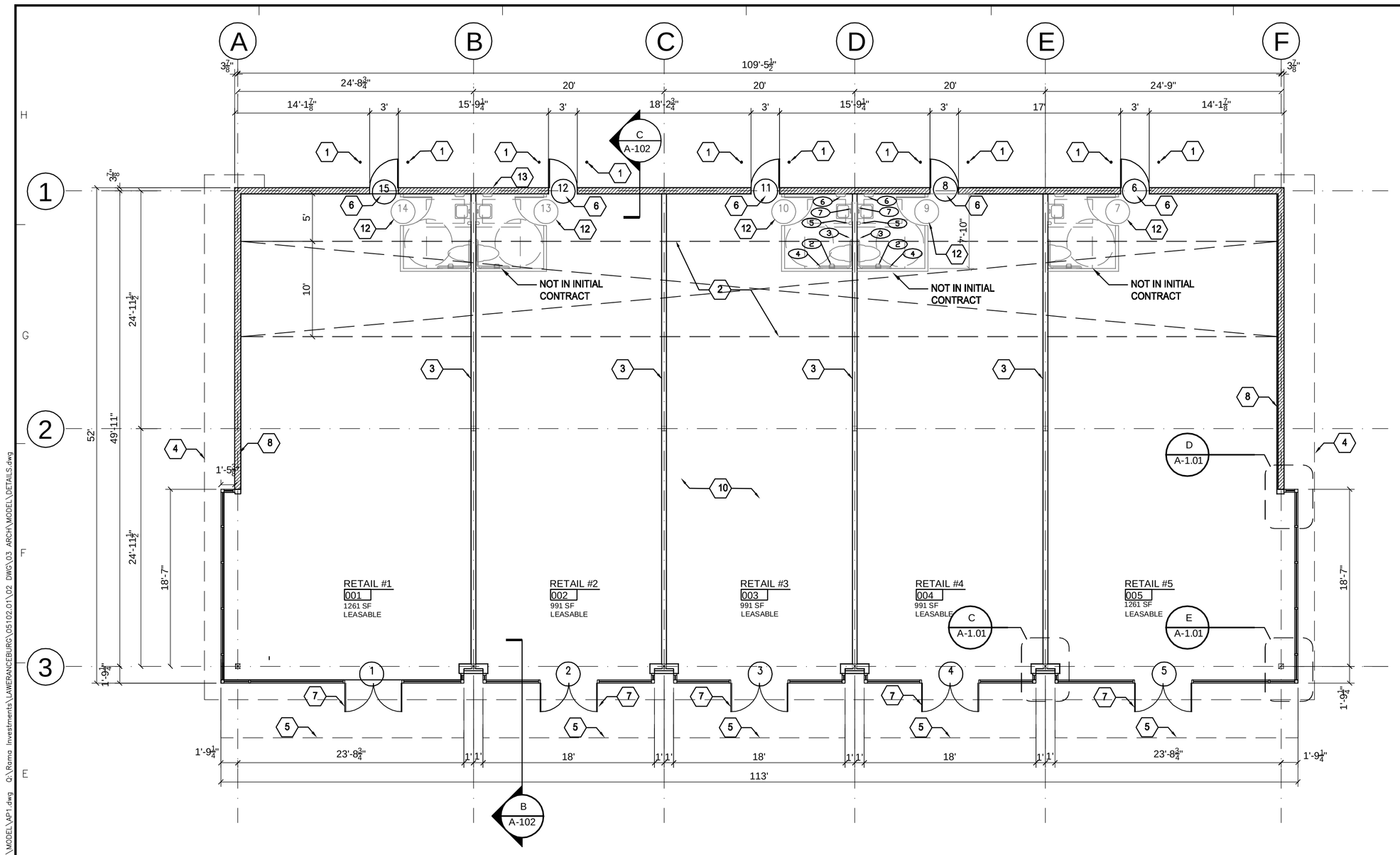

A FLOOR PLAN
1/8" = 1'-0"

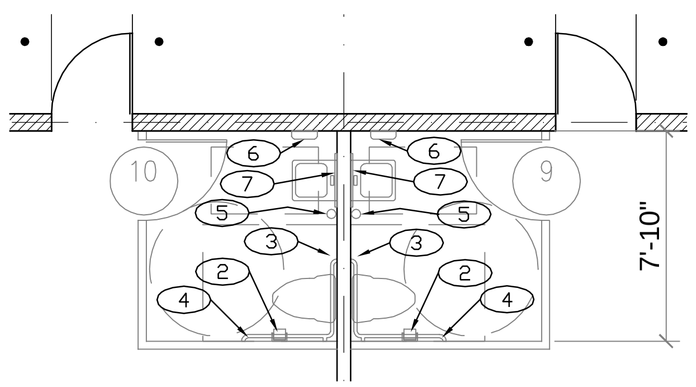

G ENLARGED RESTROOM PLAN (REFERNCE ONLY)
1/4" = 1'-0"

TOILET ACCESSORIES:

	DESCRIPTION	MOUNTING HEIGHT	REMARKS/ MODEL NUMBERS
1	TOILET TISSUE DISPENSER	19" AFF TO CL	1, 5 B-2730
2	36" GRAB BAR	34" AFF TO CL	1, 5 B-6106
3	42" GRAB BAR	34" AFF TO CL	1, 5 B-6106
4	SOAP DISPENSER	40" AFF BOTTOM	4 B-8221
5	PAPER TOWEL DISP. & WASTE RECEPTACLE	55" AFF TOP	1, 5 B-262
6	MIRROR IN SS FRAME 18"X36"	40" AFF BOTTOM	1, 5 B-165-1836

(REFERENCE ONLY)

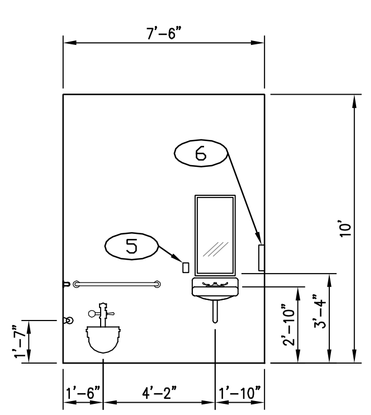

H RESTROOM ELEVATION (REFERENCE ONLY)
1/4" = 1'-0"

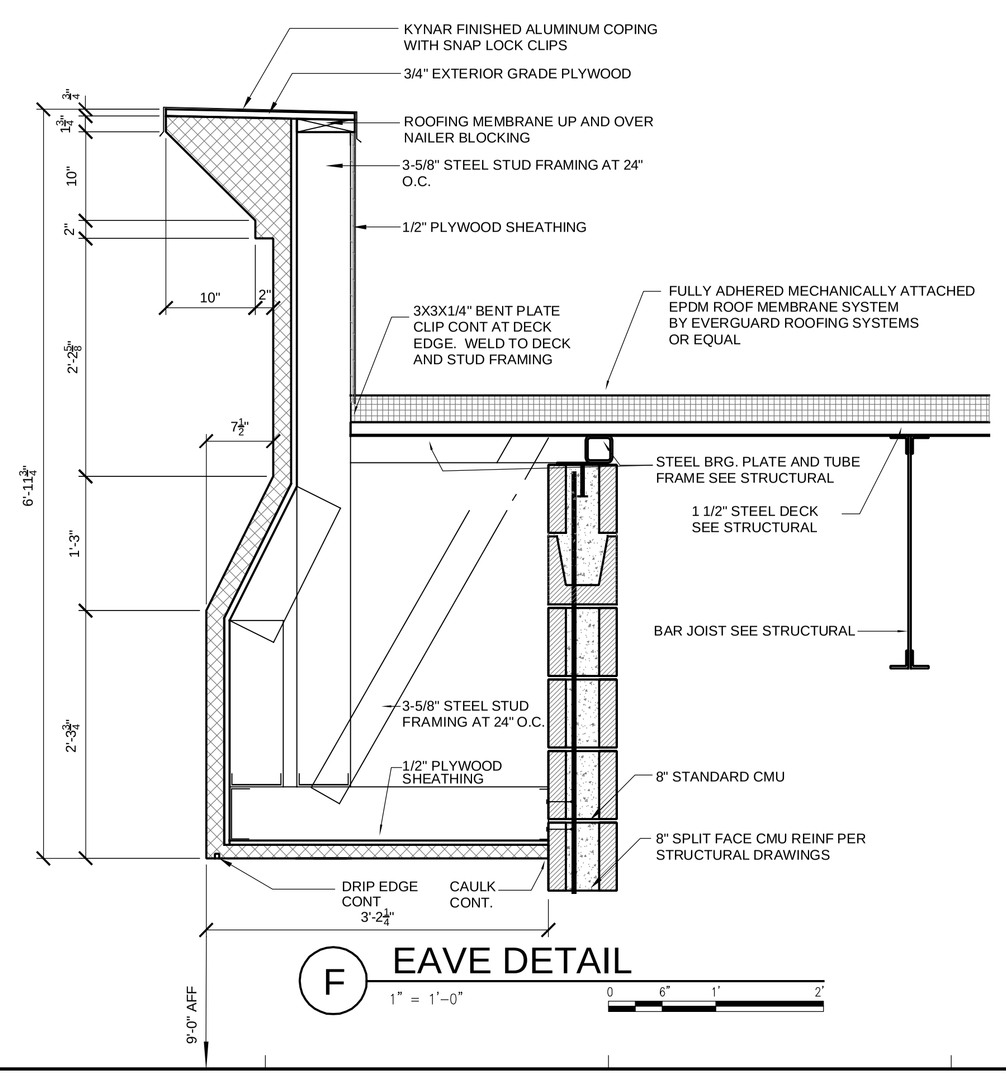

F EAVE DETAIL
1" = 1'-0"

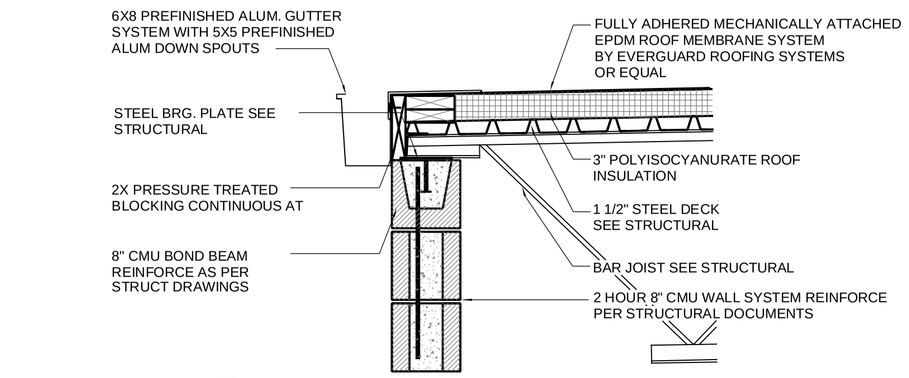

B EAVE DETAIL
1" = 1'-0"

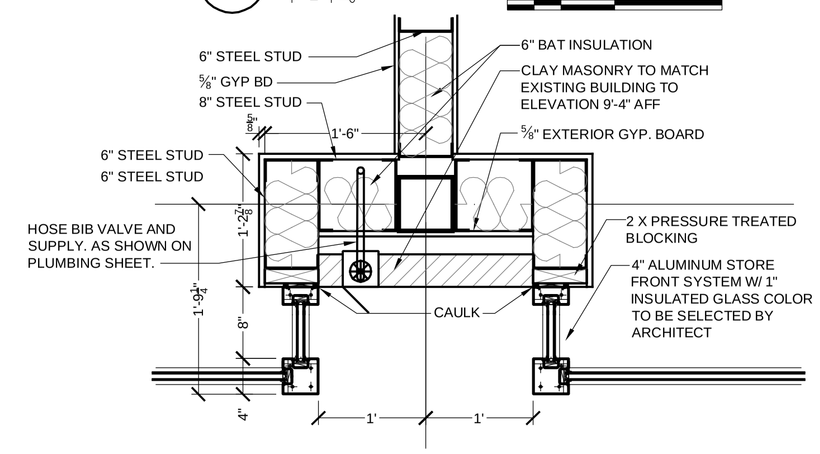

C STOREFRONT DETAIL
1" = 1'-0"

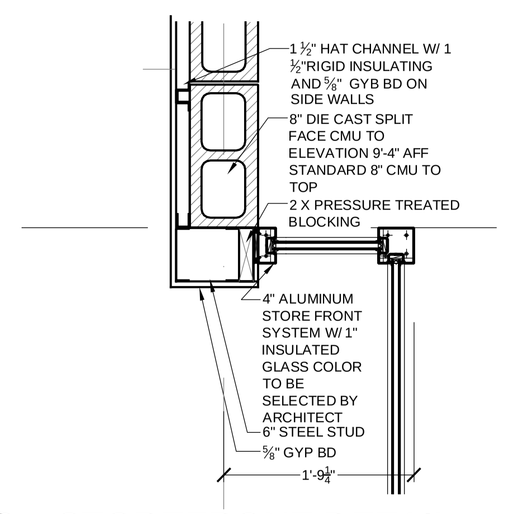

D STOREFRONT DETAIL
1" = 1'-0"

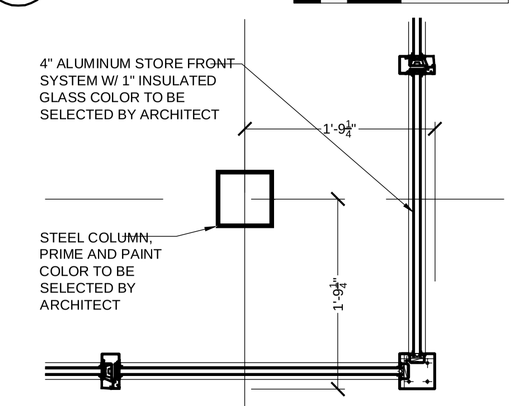

E STOREFRONT DETAIL
1" = 1'-0"

GENERAL NOTES

KEYED NOTES

1. 6" BOLLARD AS PER DETAIL IN SITE DRAWINGS
2. LEAVE SLAB OUT OF THIS AREA FOR PLUMBING FIT UP. PLACE AND FINISH AT THE POINT OF TENNANT FIT UP AS REQUIRED BY TENNANT.
3. 6" METAL STUD W/ 1 LAYER ⅝" F.C. GYP BD EACH SIDE, 6" BATT INSULATION IN CAVITY. FINISH GYP BD PAINT READY AND PRIME W/ 1 COAT LATEX PRIMER.
4. EIFS SOFFIT ABOVE
5. STANDING SEAM METAL CANOPY ON 15# RESIN SLIP FELT, ⅝" EXTERIOR GRADE PLYWOOD AND 3⅝" METAL STUD FRAME.
6. 3'-0" X 7'-0" HM DOOR IN 3'-0" X 7'-0" HM MASONRY HEAD FRAME
   HARDWARE: -
   THUMB TURN DEAD BOLT LOCK
   3 HINGES
   1 PASSAGE SET NO KNOB OR PULL ON OUTSIDE
7. 3'-0" X 7'-0" ALUMINUM FRAME FULL GLASS DOOR AS PROVIDED BY STORE FRONT MFGR.
   HARDWARE: -
   THUMB TURN DEADBOLT LOCK
   ALL OTHER HARDWARE BT STORE FRONT MFGR
8. 1½" STUD ON 8" CMU WALL W. ⅝" GYP BD TAPE AND FINISH PAINT READY AND PRIME W/ 1 COAT OF LATEX PRIMER
9. CLEAR FINISH ON CMU
10. SEAL CONCRETE FLOOR
11. 8" 2 HOUR CMU WALL SYSTEM. REINFORCE AS DEFINED IN STRUCTURAL DRAWINGS.
12. 3'-0" x 6'-8" PRE-HUNG HOLLOW CORE WOOD DOOR W/ PRIVACY HARDWARE SET. WOOD CASING.

CMW inc.
400 E. Vine, Ste 400, Lexington, KY 40507 859.254.6623 Fax 859.259.1877

OWNERSHIP OF INSTRUMENTS OF SERVICE
ALL REPORTS, DRAWINGS, SPECIFICATIONS, COMPUTER FILES, FIELD DATA, NOTES AND OTHER DOCUMENTS AND INSTRUMENTS PREPARED BY CMW, INC. AS INSTRUMENTS OF SERVICE SHALL REMAIN THE PROPERTY OF CMW, INC. CMW, INC. SHALL RETAIN ALL PERTINENT LAW, STATUTORY AND OTHER RIGHTS, INCLUDING BUT NOT LIMITED TO, THE COPYRIGHT THERETO.

FAILURE TO ABIDE BY DESIGN DOCUMENTS OR TO OBTAIN CLARIFICATION

THE DESIGN PROFESSIONAL WAIVES ANY AND ALL RESPONSIBILITY AND LIABILITY FOR ANY DAMAGE RESULTING FROM FAILURE TO FOLLOW THESE DESIGN DOCUMENTS OR TO OBTAIN DESIGN INTENT THEY CONVEY, OR FOR OTHERS' FAILURE TO ABIDE BY THEIR OWN DOCUMENTS OR FOR OTHERS' FAILURE TO OBTAIN AND/OR FOLLOW THE DESIGN INTENT OR OTHER GUIDANCE WITH RESPECT TO ANY DEFICIENCIES, OMISSIONS, AMBIGUITIES OR CONFLICTS WHICH ARE ALLEGED.

PLAN

RAMA FORUM SHOPS II
KENTUCKY 44 AT COPPERFIELD CT
LAWRENCEBURG, KENTUCKY

Issue Date:	NOV. 2005
Drawn By:	J.G.
Checked By:	T.O.
Revisions:	
Mark	Date

Project Number
03035.A1

© 2003 CMW

A-101