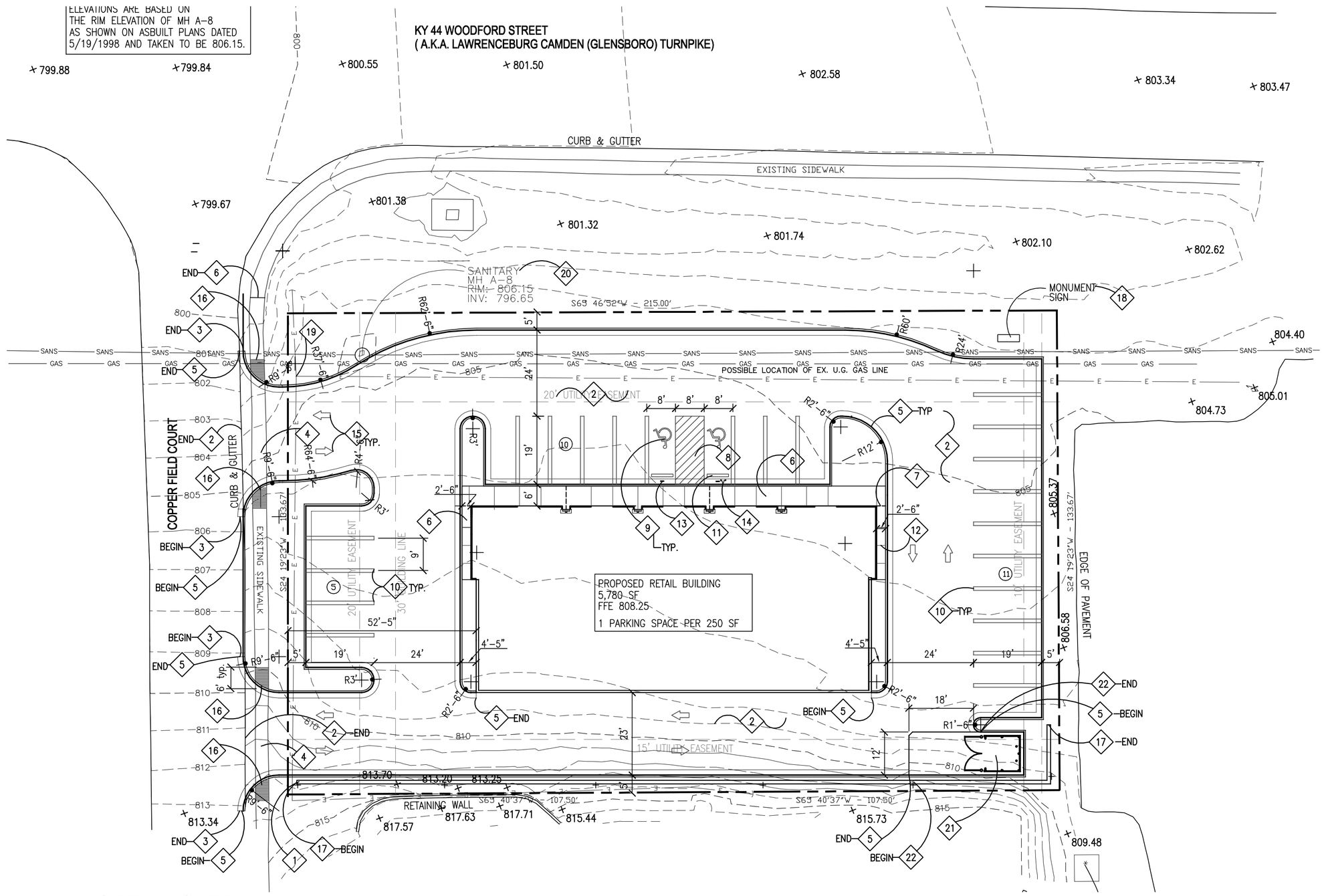

SITE LAYOUT PLAN

SCALE: 1"=20'

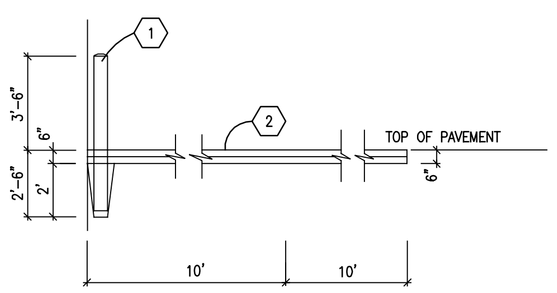

5 DUMPSTER PAD SECTION
NOT TO SCALE

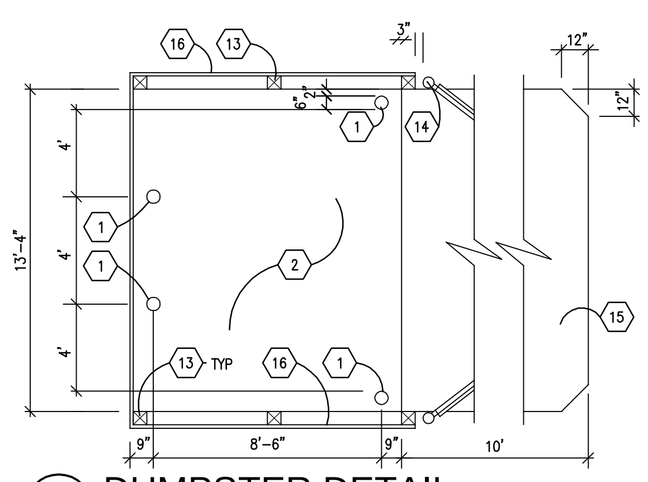

1 DUMPSTER DETAIL
NOT TO SCALE

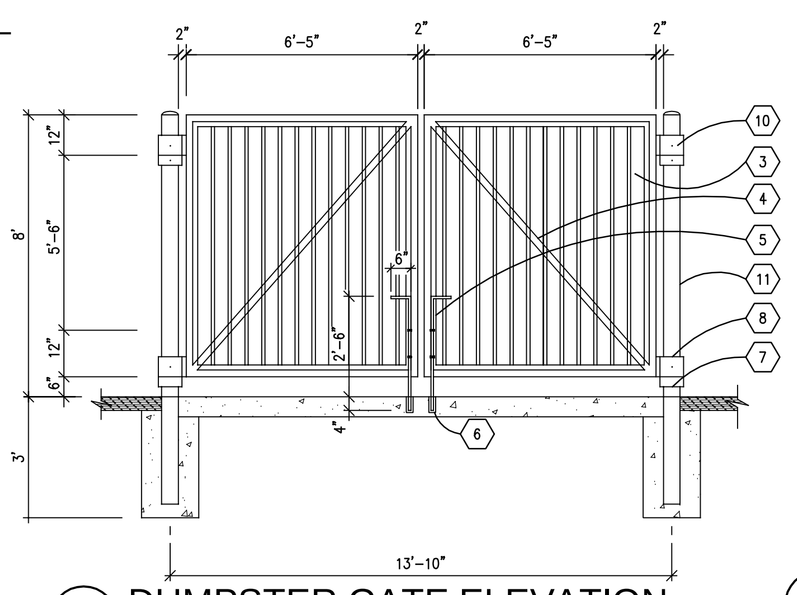

2 DUMPSTER GATE ELEVATION
NOT TO SCALE

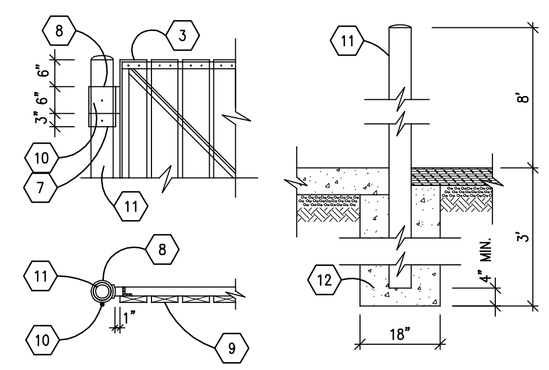

3 DUMPSTER GATE DETAIL
NOT TO SCALE

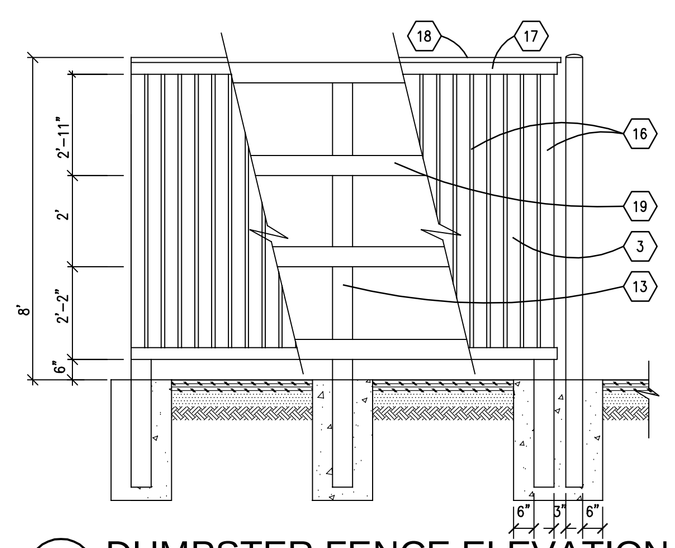

4 DUMPSTER FENCE ELEVATION
NOT TO SCALE

GENERAL NOTES

KEYED NOTES

1. REFEERNCE POINT FOR LAYOUT CONTROL EQUALS SOUTHWEST PROPERTY CORNER. ALL DIMENSIONS ARE PARRALLEL OR PERPENDICULAR TO THE BUILDING AND WEST PROPERTY LINE. SEE ARCHITECTURAL SHEETS FOR EXACT BUILDING DIMENSIONS.
2. BITUMINOUS PAVEMENT AND BASE PER DETAIL G/C-501.
3. SAW, CUT AND REMOVE EXISTING CONCRETE CURB AND GUTTER. MATCH WIDTH OF NEW DRIVE.
4. SAW, CUT AND REMOVE EXISTING CONCRETE SIDEWALK TO THE EXTEND REQUIRED TO FACILITATE CONSTRUCTION OF ENTRANCE DRIVES AND HANDICAPPED RAMPS.
5. CONCRTETE CURB AND GUTTER PER DETAIL I/C-501
6. CONCRETE SIDEWALK PER DETAIL D/C-501
7. EXPANSION JOINT PER DETAIL J/C-501. EXPANSION JOINT TO OCCUR WITHIN THE SPACING MODULE OF THE CONTROL JOINTS AND ARE REQIRED MAXIMUM OF 40' APART AND WHERE ANY CONCRETE WORK ABUTS ANY NEW OR EXISTING CONCRETE.
8. 6" WIDE BLUE PAINTED PARKING STALL STRIPE AND 6" WIDE BLUE PAINTED BORDER WITH 6" WIDE BLUE STRIPES AT 45° ANGLE AND 3' O.C. TYPICAL OF ALL HANDICAP SPACES.
9. HANDICAP SYMBOL PER DEATAIL L/C-501, TYPICAL.
10. 4" WIDE DOUBLE PAINTED "WHITE" PARKING STRIPES, TYPICAL. COORDINATE WITH CITY REQUIREMENTS.
11. WHEEL STOP PER DETAIL B/C-501, TYPICAL.
12. CONTROL JOINTS EQUALLY SPACED AS INDICATED IN ALL CONCRETE SIDEWALKS PER DETAIL K/C-501.
13. HANDICAP SIGN CENTERED ON EACH SPACE PER DETAIL F/C-501.
14. PROVIDE VAN ACCESSIBLE SIGN AT LOCATIONS MARKED WITH LETTER "V".
15. TRAFFIC FLOW ARROWS PER DETAIL C/C-501, TYPICAL.
16. HANDICAP RAMP PER DETAIL M/C-501.
17. REDI-ROCK RETAINING WALL SYSTEM AS MANUFACTURED BY REDI-ROCK INTERNATIONAL. CONTACT BELL CONCRETE IND., INC., 327 NORTH 19TH STREET, MIDDLESBORO, KY, 40965, 800-442-0127. WALL DESIGN, GEOGRID REQIREMENTS, BACKFILL AND FOUNDATION DRAIN SYSTEM BY WALL MANUFACTUER, WALL FACE TO BE SPLIT LIMESTONE, STANDARD CONCRETE GRAY COLOR AND INSTALLED BY EXPERIENCED INSTALLER PER MANUFACTUER'S SPECIFICATIONS. COORDINATE CONSTRUCTION WITH LOCAL UTILITY COMPANY
18. MONUMENT SIGN BY OTHERS. NOT IN CONTRACT.
19. UTILITY POLE AND GREY WIRE TO REMAIN AND BE PROTECTED THROGHOUT ALL CONSTRUCTION ACTIVITIES.
20. SANITARY MANHOLE TO REMAIN. COORDINATE WITH SITE GRADING PLAN.
21. DUMPSTER PAD AND SCREEN PER DETAILS THIS SHEET.
22. HEADER CURB PER DETAIL H/C-501.

DUMPSTER KEYED NOTES

1. 6"ø STL. PIPE FILLED WITH CONC. SET IN CONCRETE AS SHOWN. PAINT YELLOW.
2. 6" CONC. SLAB WITH 6x5 #W2.1 x W2.1 WWF ON COMPACTED 7" CRUSHED STONE.
3. 1x6 PRESSURE TREATED WOOD SLATS STAIN TO MATCH BUILDING TRIM COLOR.
4. GATE FRAME FABRICATED FROM 2"x2"x1/4" STEEL TUBE, MITER AT CORNERS, WELD & GRIND SMOOTH, AND PAINT TO MATCH BUILDING TRIM COLOR.
5. PIVOTING GATE (CANE BOLT) LATCHES FABRICATED FROM 1/2"ø STEEL RODS.
6. PROVIDE 3/4"ø x 4" DEEP SLEEVES IN CONCRETE PAVEMENT FOR LATCHES.
7. METAL COLLAR TYPICAL, WELD BOTTOM COLLAR TO POST, AND BOLT TOP COLLAR
8. METAL COLLAR TO FIT OVER 6"ø POST. GREASE AREA BETWEEN POST AND HINGE COLLAR.
9. ANCHOR FRAME USING GALVANIZED BOLTS AND NUTS.
10. HYDRAULIC GREASE FITTING, DRILL AND TAP HOLE (TYP.-4PL.)
11. 6"ø CONCRETE FILLED STEEL POST WITH CROWN TOP. PAINT TO MATCH BUILDING TRIM COLOR.
12. POURED CONCRETE.
13. 6x6 PRESSURE TREATED POST, 10' LONG, 3' IN GROUND, SET IN CONCRETE STAIN TO MATCH BUILDING COLOR.
14. SEE DETAIL 3 FOR GATE AND POST DETAIL.
15. SCORE CONCRETE SLAB AT EQUAL SPACING BOTH DIRECTIONS AND 10' O.C. MAXIMUM.
16. DUMPSTER FENCE.
17. 1x6 PRESSURE TREATED WOOD TRIM, STAIN TO MATCH BUILDING COLOR.
18. PRESSURE TREATED 2x8 WOOD CAP. STAIN TO MATCH BUILDING COLOR.
19. PRESSURE TREATED 2x6 WOOD NAILER.

NOTE: REUSE EXISTING MATERIALS TO THE EXTENT FEASIBLE AND SUPPLEMENT AS NECESSARY TO ACHIEVE THE REQUIREMENTS OF THIS DETAIL.

CMW inc.
400 E. Vine, Ste 400, Lexington, KY 40507 859.254.6623 Fax 859.259.1877

OWNERSHIP OF INSTRUMENTS OF SERVICE
ALL REPORTS, DRAWINGS, SPECIFICATIONS, COMPUTER FILES, FIELD DATA, NOTES AND OTHER DOCUMENTS OR INSTRUMENTS PREPARED BY CMW, INC. AS INSTRUMENTS OF SERVICE SHALL REMAIN THE PROPERTY OF CMW, INC. CMW, INC. RETAINS ALL COMMON LAW, STATUTORY AND OTHER RESERVED RIGHTS, INCLUDING THE COPYRIGHT THERETO.

FAILURE TO ABIDE BY CONTRACT DOCUMENTS OR TO OBTAIN GUIDANCE

THE DESIGN PROFESSIONAL WAIVES ANY AND ALL REQUIREMENTS THAT ARISE FROM, RELATE TO, OR ARE PERCEIVED TO ARISE FROM, RELATE TO, OR FOR PROBLEMS WITH, THE SERVICES, OR FOR OTHERS' FAILURE TO OBTAIN AND/OR FOLLOW THE DESIGN PROFESSIONAL'S GUIDANCE WITH RESPECT TO ANY DISCREPANCIES, AMBIGUITIES, OMISSIONS, OR CONFLICTS WHICH MAY EXIST.

SITE LAYOUT PLAN

RAMA FORUM SHOPS II
KENTUCKY 44 @ COPPERFIELD COURT
LAWRENCEBURG, KENTUCKY

Issue Date:	Nov. 2005
Drawn By:	dcc
Checked By:	wt
Revisions:	
Mark	Date
Project Number	05102.01

© 2005 CMW

C-102