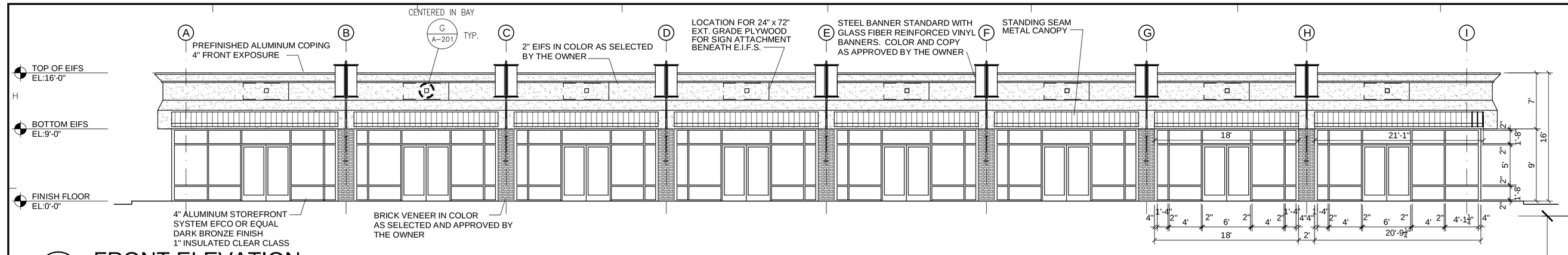

A FRONT ELEVATION
1/8" = 1'-0"

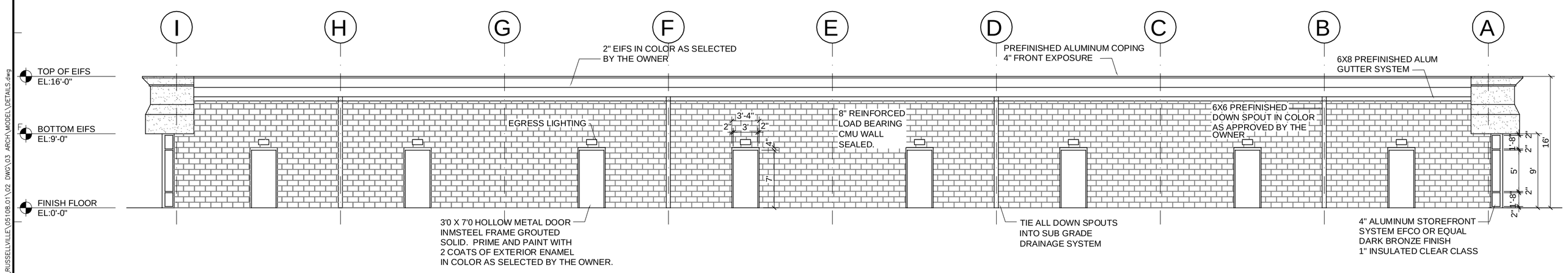

C BACK ELEVATION
1/8" = 1'-0"

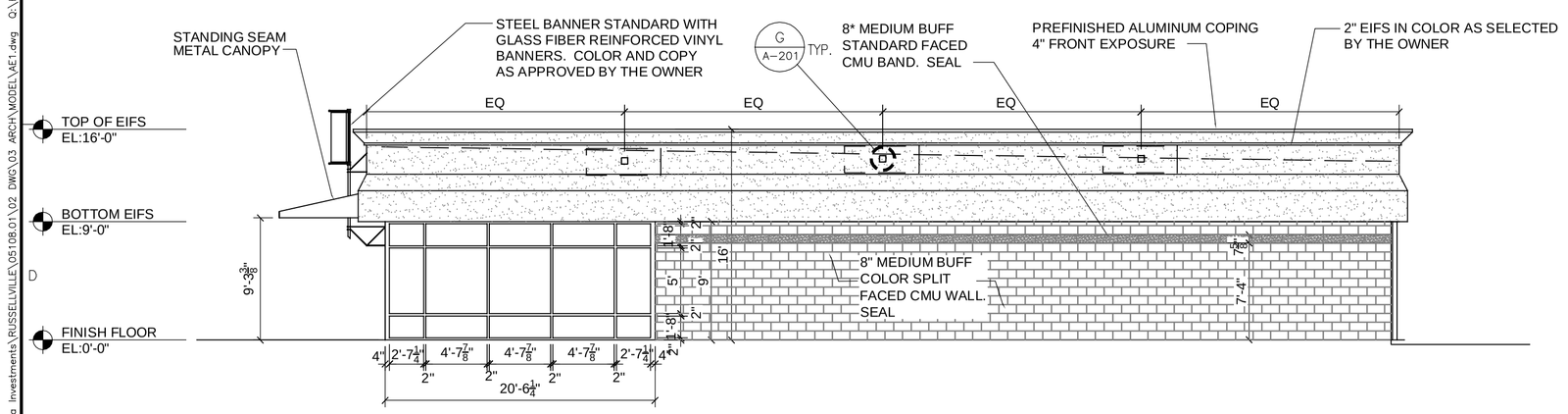

B RIGHT ELEVATION
1/8" = 1'-0"

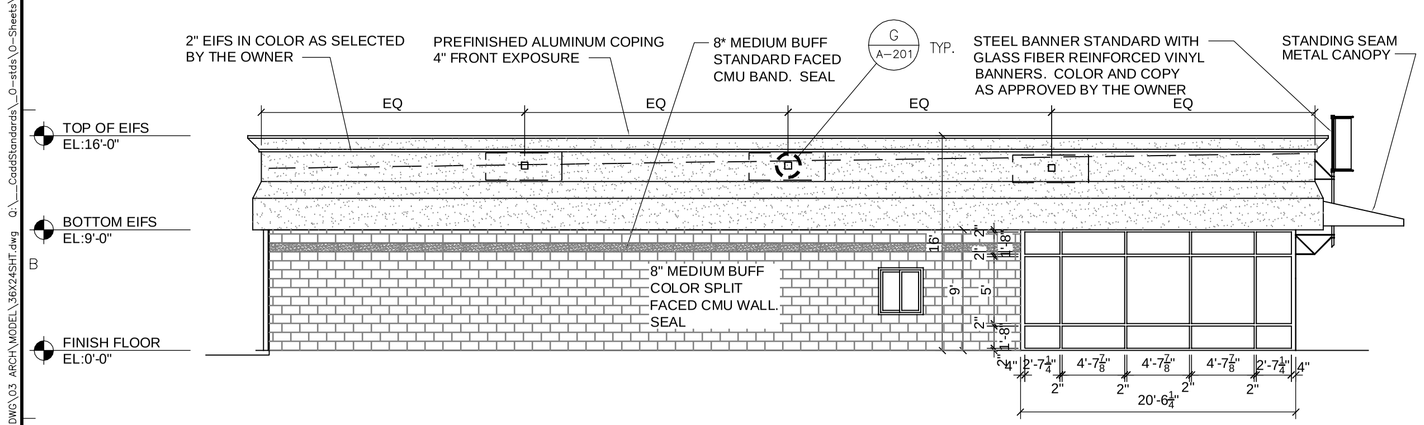

D LEFT ELEVATION
1/8" = 1'-0"

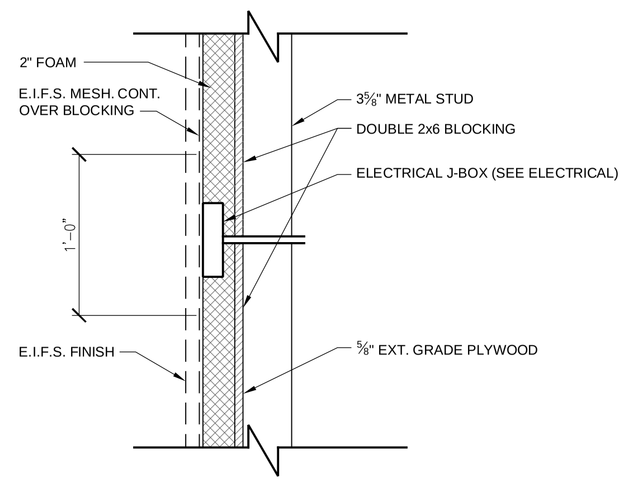

G J-BOX DETAIL
1 1/2" = 1'-0"

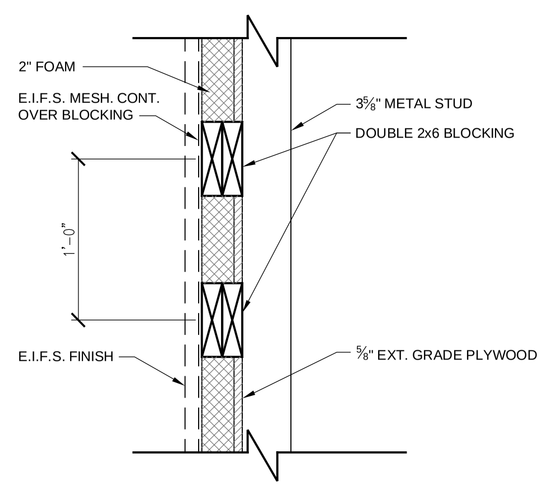

F BRACKET BLOCKING
1 1/2" = 1'-0"

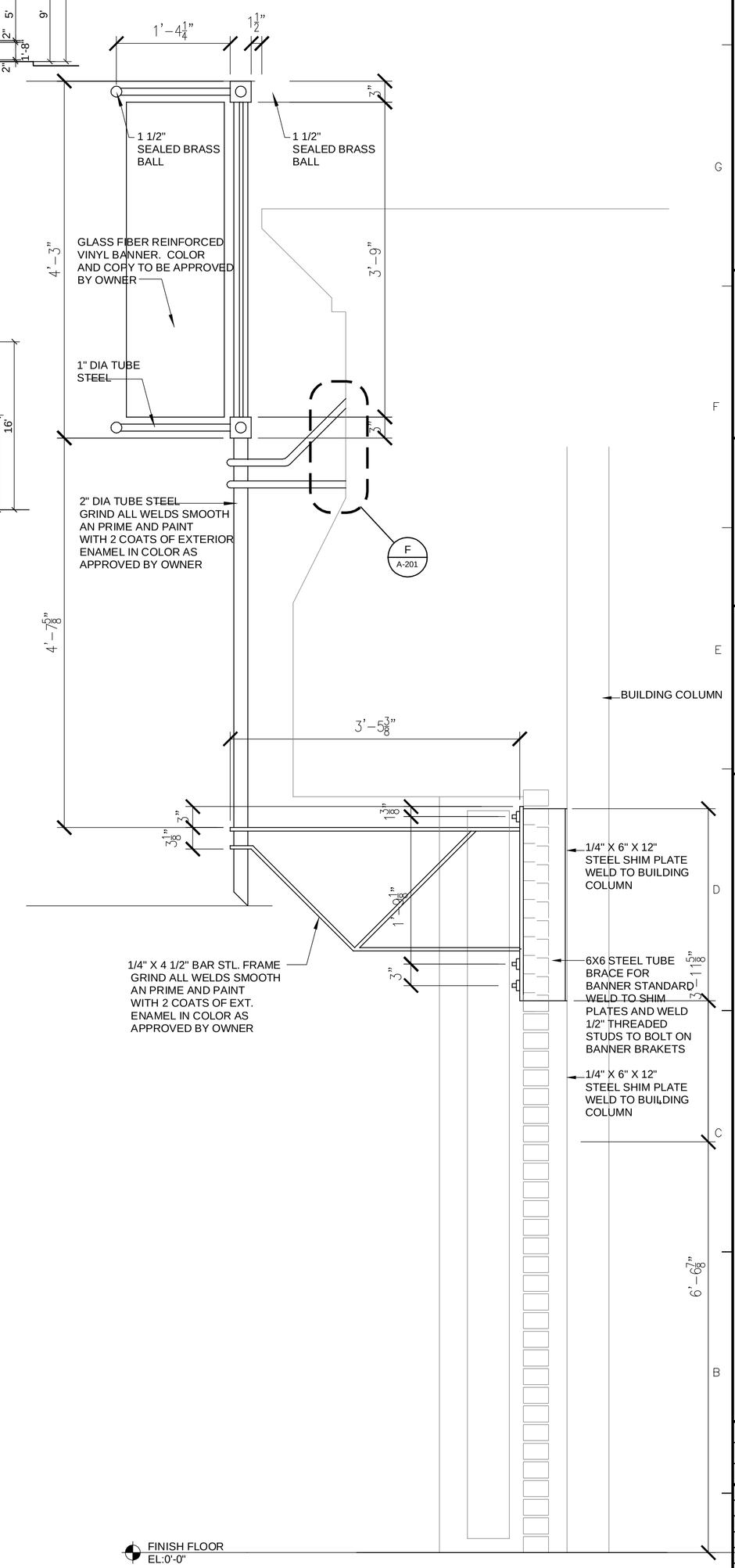

E BANNER STANDARD DETAIL
1" = 1'-0"

CMW inc.
400 E. Vine, Ste 400, Lexington, KY 40507 859.254.6623 Fax 859.259.1877

OWNERSHIP OF INSTRUMENTS OF SERVICE
ALL REPORTS, DRAWINGS, SPECIFICATIONS, COMPUTER FILES, FIELD DATA, NOTES AND OTHER DOCUMENTS AND INSTRUMENTS PREPARED BY CMW, INC. AS INSTRUMENTS OF SERVICE SHALL REMAIN THE PROPERTY OF CMW, INC. CMW, INC. SHALL RETAIN ALL PERTINENT RIGHTS INCLUDING BUT NOT LIMITED TO, THE COPYRIGHT THERETO.

FAILURE TO ABIDE BY DESIGN DOCUMENTS OR TO OBTAIN CLARIFICATION
THE DESIGN PROFESSIONAL WAIVES ANY AND ALL RESPONSIBILITY AND LIABILITY FOR ANY DAMAGES ARISE FROM FAILURE TO FOLLOW THESE DESIGN DOCUMENTS, OR TO THE DESIGN INTENT THEY CONVEY, OR FOR OTHERS' FAILURE TO OBTAIN CLARIFICATION FROM THE DESIGN PROFESSIONAL.
OTHERS' FAILURE TO OBTAIN AND/OR FOLLOW ANY ADDITIONAL DESIGN GUIDANCE WITH RESPECT TO ANY ITEM(S) IN THESE DESIGN DOCUMENTS MAY RESULT IN DEFECTIVE WORKMANSHIP, AMBIGUITIES OR CONFLICTS WHICH ARE ALLEGED.

ELEVATIONS (BUILDING 1)

RAMA FORUM SHOPS II
HIGHWAY 68 BYPASS & SAM WALTON DRIVE
RUSSELLVILLE, KENTUCKY

Issue Date:	SEPT. 2005
Drawn By:	XX
Checked By:	--
Revisions:	
Mark	Date

Project Number
05108.01

© 2003 CMW

A-201